KOBE Brand Range Hood

Model No.

RA3830SQB-WM-1(30”) / RA3836SQB-WM-1 (36”)

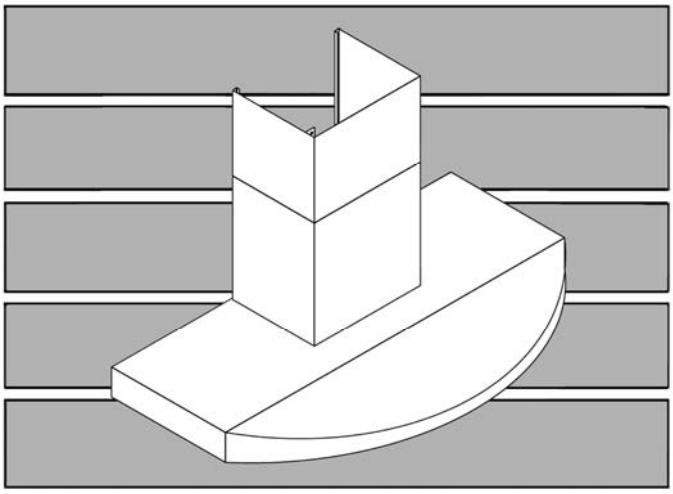

RA2830SQB-1 (30”) / RA2836SQB-1 (36”)
RA2830SQB-WM-1 (30”) / RA2836SQB-WM-1 (36”)

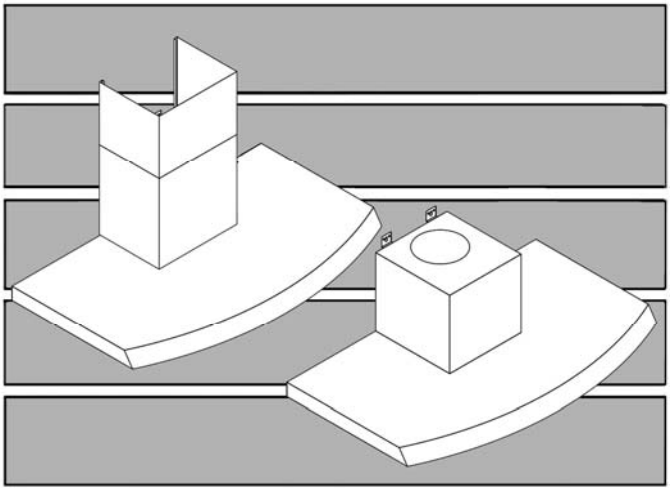

INSTALLATION INSTRUCTIONS
AND OPERATION MANUAL

IMPORTANT
READ THIS FIRST

READ BEFORE INSTALLATION

1. Carefully check all contents of packages;
2. Thoroughly inspect the unit for any cosmetic damages or defects;
3. Test the unit before installation;
4. Have a certified contractor/electrician do the installation.

IF THERE IS ANY PROBLEM:

1. **DO NOT INSTALL THE UNIT AND KEEP ALL ORIGINAL PACKAGING MATERIAL.**
2. Have your original invoice as proof of purchase and product serial number ready.
3. Call 1-877-BUY-KOBE (289-5623); or e-mail to info@koberangehoods.com to report the problem.

NO RETURN, NO REFUND, NO EXCHANGE IF:

1. **PRODUCT HAS BEEN INSTALLED**
2. **KNOCK-OUT HOLES HAVE BEEN PUNCTURED**
3. **MISSING ORIGINAL PACKAGING MATERIAL AND/OR PARTS**

[ENGLISH]

- READ AND SAVE THESE INSTRUCTIONS -

CONTENTS

IMPORTANT SAFETY INSTRUCTIONS 1
COMPONENTS OF PACKAGE 3
INSTALLATION 6
OPERATING INSTRUCTIONS 12
MAINTENANCE 14
SPECIFICATIONS 15
MEASUREMENTS & DIAGRAMS 17
PARTS LIST 20
CIRCUIT DIAGRAM 23
TROUBLE SHOOTING 24
WARRANTY 25
PRODUCT REGISTRATION 27

- READ ALL INSTRUCTIONS CAREFULLY BEFORE STARTING -

ALL WIRING MUST BE DONE BY A PROFESSIONAL AND IN ACCORDANCE WITH NATIONAL AND LOCAL ELECTRICAL CODES

C US
221547

IMPORTANT SAFETY INSTRUCTIONS

- PLEASE READ THIS SECTION CAREFULLY BEFORE INSTALLATION -

⚠WARNING: **TO REDUCE THE RISK OF FIRE, ELECTRIC SHOCK OR PERSONAL INJURY, OBSERVE THE FOLLOWING:**

1) Installation and electrical wiring must be done by qualified professionals and in accordance with all applicable codes and standards, including fire-rated construction.
2) When cutting or drilling into wall or ceiling, be careful not to damage electrical wiring or other hidden utilities.
3) Ducted fans must be vented to the outside.
   a) Before servicing or cleaning unit, open the light panel and SWITCH POWER OFF AT SERVICE PANEL.
   b) Clean all grease laden surfaces frequently. To reduce the risk of fire and to disperse air properly, make sure to vent air outside. DO NOT vent exhaust air into wall spaces, attics, crawl spaces or garages.

NOTE - This warranty is void without an authorized agent's receipt or if unit is damaged due to misuse, poor installation, improper use, mistreatment, negligence or any other circumstances beyond the control of KOBE RANGE HOODS authorized agents. Any repair carried out without the supervision of KOBE RANGE HOODS authorized agents will automatically void the warranty.

- KOBE RANGE HOODS will not be held responsible for any damages to personal property or real estate or any bodily injuries whether caused directly or indirectly by the range hood.

⚠WARNING: **TO REDUCE THE RISK OF PERSONAL INJURY IN THE EVENT OF A RANGE TOP GREASE FIRE:**

1. Keep all fan, baffle/spacer/filter/oil tunnel/oil container and grease-laden surfaces clean. Grease should not be allowed to accumulate on fan, baffle/spacer/filter/oil tunnel/oil container.
2. Always turn hood ON when cooking.
3. Use high settings on cooking range ONLY when necessary.
4. Do not leave cooking range unattended when cooking.
5. Always use cookware and utensils appropriate for the type and amount of food prepared.
6. Use this unit only in the manner intended by the manufacturer.
7. Before servicing, switch power off at service panel and lock service panel (if possible) to prevent power from switching on accidentally.
8. Clean ventilating fan frequently.

What to Do In The Event Of a Range Top Grease Fire

- SMOTHER FLAMES with a tight fitting lid, cookie sheet, or metal tray, and then turn off the burner. KEEP FLAMMABLE OR COMBUSTIBLE MATERIAL AWAY FROM FLAMES. If the flames do not go out immediately, EVACUATE THE AREA AND CALL THE FIRE DEPARTMENT or 911.
- NEVER PICK UP A BURNING PAN – You May Get Burned.
- DO NOT USE WATER, including wet dishcloths or towels – a steam blast will result.
- Use an extinguisher ONLY if:
  a) You have a Class A, B, C extinguisher and know how to operate it.
  b) The fire is small and contained in the area where it started.
  c) The fire department has been called.
  d) You can fight the fire with your back to an exit.

What to Do If You Smell Gas

- Extinguish any open flame.
- Do not try to turn on the lights or any type of appliance.
- Open all doors and windows to disperse the gas. If you still smell gas, call the Gas Company and Fire Department right away.

⚠CAUTION

1) For general ventilation use only. Do not use to exhaust hazardous or explosive materials and vapors.
2) To reduce the risk of fire, use only metal ductwork. Sufficient air is needed for proper combustion and exhausting of gases through the flue (chimney) to prevent back drafting.
3) Follow the heating equipment manufacturer's guideline and safety standards such as those published by the National Fire Protection Association (NFPA), and the American Society for Heating, Refrigeration and Air Conditioning Engineers (ASHRAE), and code authorities.
4) Activating any switch on may cause ignition or an explosion.
5) Due to the size and weight of this hood, installation by 2 persons is recommended.

⚠ WARNING

ELECTRICAL SHOCK HAZARD – Can result in serious injury or death. Disconnect appliance from electric power before servicing. If equipped, the fluorescent light bulb contains small amounts of mercury, which must be recycled or disposed of according to Local, State, and Federal Codes.

COMPONENTS OF PACKAGE

(Must keep all material for returns or refunds)

For Wall Mounted Application
RA3830SQB-WM-1 (30”) / RA3836SQB-WM-1 (36”)

Range Hood Box

{A} KOBE Range Hood
{B} Warranty Registration Card
{C} Instructions Manual (CD)
{D} Baffle Filter x 2 (30” hood)
x 3 (36” hood)
{E} 6” Round Plastic Collar
{F} Duct cover Mounting Bracket
{G} Adjustable Duct Cover
{H} Screws Package

{A}

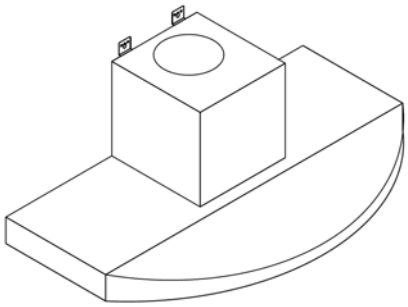

{B}

{C}

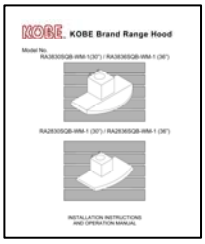

{D}

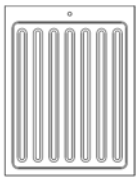

* Pre-installed

{E}

* Pre-installed

{F}

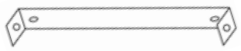

{G}

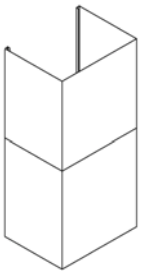

{H}

3/16 ”x 3/8” (8PCS)

♦ FOR MORE INFORMATION, PLEASE VISIT OUR WEBSITE **www.KOBERangeHoods.com** OR CONTACT KOBE RANGE HOODS AT (626) 775-8880.

(Must keep all material for returns or refunds)

For Under Cabinet Application
RA2830SQB-1 (30”) / RA2836SQB-1 (36”)

Range Hood Box

{A} KOBE Range Hood
{B} Warranty Registration Card
{C} Instructions Manual (CD)
{D} Baffle Filter x 2 (30” hood)
x 3 (36” hood)
{E} 6” Round Plastic Collar

{A}

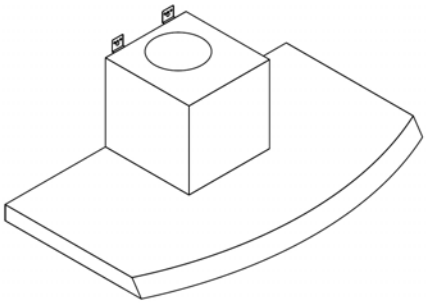

{B}

{C}

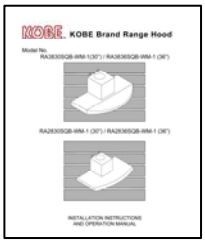

{D}

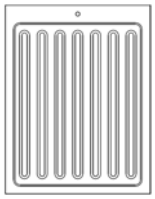

* Pre-installed

{E}

* Pre-installed

♦ FOR MORE INFORMATION, PLEASE VISIT OUR WEBSITE **www.KOBERangeHoods.com** OR CONTACT KOBE RANGE HOODS AT (626) 775-8880.

(Must keep all material for returns or refunds)

For Wall Mounted Application
RA2830SQB-WM-1 (30”) / RA2836SQB-WM-1 (36”)

Range Hood Box

{A} KOBE Range Hood
{B} Warranty Registration Card
{C} Instructions Manual (CD)
{D} Baffle Filter x 2 (30” hood)
x 3 (36” hood)
{E} 6” Round Plastic Collar
{F} Duct cover Mounting Bracket
{G} Adjustable Duct Cover
{H} Screws Package

{A}

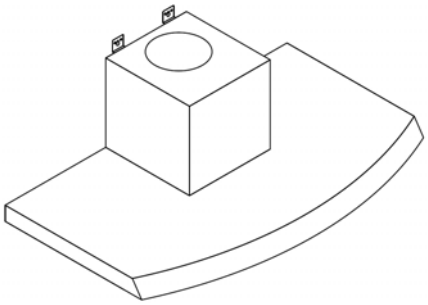

{B}

{C}

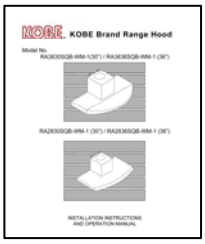

{D}

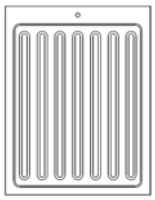

* Pre-installed

{E}

* Pre-installed

{F}

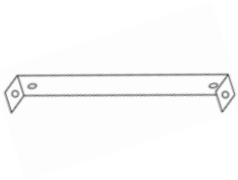

{G}

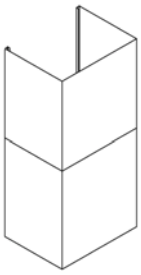

{H}

3/16 ”x 3/8” (8PCS)

♦ FOR MORE INFORMATION, PLEASE VISIT OUR WEBSITE **www.KOBERangeHoods.com** OR CONTACT KOBE RANGE HOODS AT (626) 775-8880.

INSTALLATION

PLEASE READ ENTIRE INSTRUCTIONS BEFORE PROCEEDING

Calculation before Installation

To calculate installation, please refer to TABLE 1. (All calculation in inches.)

- FOR UNDER THE CABINET -

TABLE 1

A = Height of Floor to Ceiling
B = Height of Floor to Counter Top
(Standard: 36")
C = Preferred Height of Counter Top to Hood Bottom (Minimum 26" to 30")
D = Height of Hood
E = Height of the Cabinet

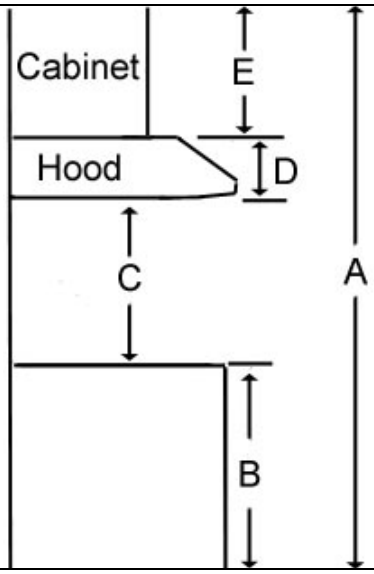

- FOR WALL MOUNT (WITH OPTIONAL DUCT COVER) -

TABLE 2

A = Height of Floor to Ceiling
B = Height of Floor to Counter Top
(Standard: 36")
C = Preferred Height of Counter Top to Hood Bottom (Minimum 26" to 30")
D = Height of Hood
E = Height of Duct Cover [F – D]
F = Height of the Hood Installation
[A – (B+C)]

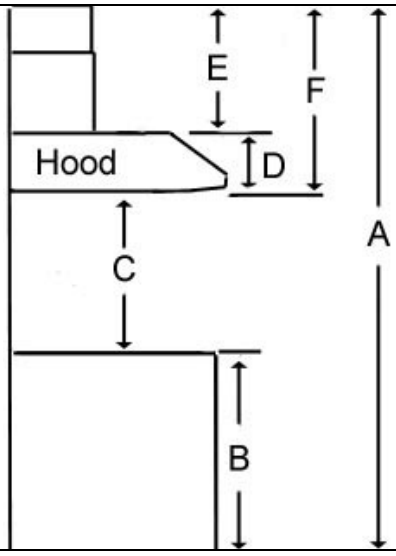

⚠SAFETY WARNING

HOOD MAY HAVE VERY SHARP EDGES; PLEASE WEAR PROTECTIVE GLOVES IF REMOVING ANY PARTS FOR INSTALLING, CLEANING OR SERVICING.

NOTE: BE CAREFUL WHEN USING ELECTRICAL SCREWDRIVER, DAMAGE TO THE HOOD MAY OCCUR.

Installation Contents

UNDER THE CABINET	8
WALL MOUNT	10

UNDER CABINET INSTALLATION

For Model No.: RA2830SQB-1 / RA2836SQB-1

Preparation before Installation

NOTE: TO AVOID DAMAGE TO YOUR HOOD, PREVENT DEBRIS FROM ENTERING THE VENT OPENING.

- Decide the location of the venting pipe from the hood to the outside. (Figure 1)
- A straight, short vent run will allow the hood to perform more efficiently.
- Try to avoid as many transitions, elbows, and long run as possible. This may reduce the performance of the hood.
- Temporarily wire the hood to test for proper operation before installing. If the hood does not operate, check the circuit breaker or house fuse. If the hood is still not working, disconnect power supply and check the continuity of all wire connections.
- Peel protective film off the hood (if any).
- Use duct tape to seal joints between pipe sections.
- Make sure the cabinet has full access opening for the hood as shown on Figure 2.
- Using reference on Page 18 to measure and create access opening for electrical wires and exhaust under the cabinet.

Hood Installation

⚠**CAUTION: USE HAND TOOLS ONLY. DO NOT OVER TIGHTEN SCREWS. IT MAY CAUSE DAMAGE TO THE HOOD.**

⚠**CAUTION: If moving the cooking range is necessary to install the hood, turn off the power in an electric range at the main electrical box. SHUT OFF THE GAS BEFORE MOVING A GAS RANGE. And use a protective covering to protect cooktop and/or countertop from damage.**

1. Using references on Table 1 and measurements on page 18 mark the leveling point for hood-mounting bracket inside the cabinet.
2. Secure two hood mounting screws (not provided) inside the cabinet leaving 1/8” away from the cabinet as shown on Figure 3.
3. Loosen hood-mounting brackets at the back of the hood, adjust brackets and tighten screws as shown in Figure 4.
4. Refer to Figure 5. Align hood-mounting bracket to the mounting screws inside the cabinet and hook hood into place. Secure and tighten the mounting screws.

⚠ **CAUTION: MAKE SURE THE HOOD IS SECURE BEFORE RELEASING.**

Figure 1

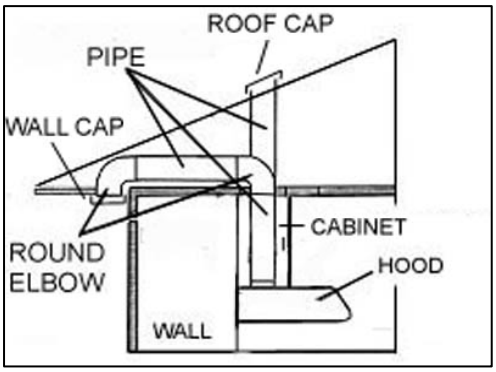

Figure 2

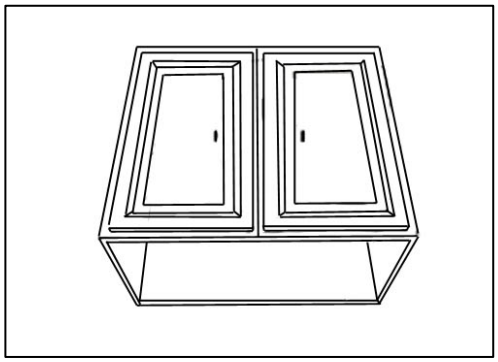

Figure 3

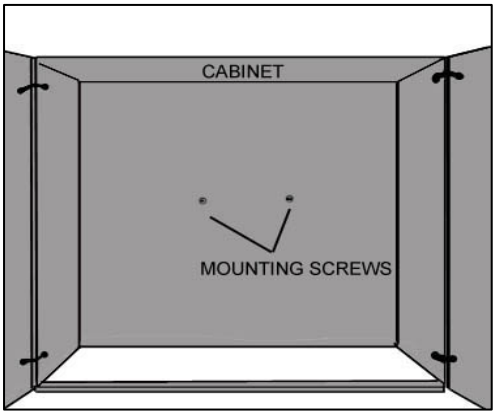

Figure 4

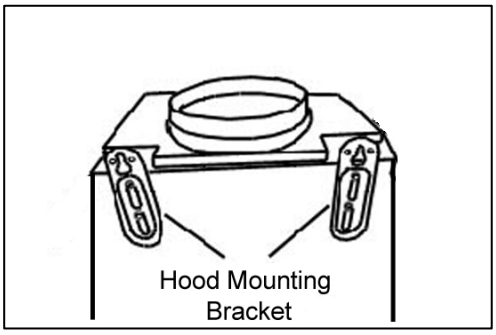

Hood Installation

5. Use steel pipe to connect the 6” round plastic collar {E} on the hood to the ductwork above. Use duct tape to make all joints secure and air tight. Refer to Figure 6

Wiring to Power Supply

⚠ **THIS RANGE HOOD MUST BE PROPERLY GROUNDED. MAKE SURE THIS IS DONE BY QUALIFIED ELECTRICIAN IN ACCORDANCE WITH ALL APPLICABLE NATIONAL AND LOCAL ELECTRICAL CODES. BEFORE CONNECTING WIRES, SWITCH POWER OFF AT SERVICE PANEL AND LOCK SERVICE PANEL TO PREVENT POWER FROM BEING SWITCHED ON ACCIDENTALLY.**

- If hood is operating normally, connect three wires (black, white and green) to house wires and cap with wire connectors.
- Store wires in the wiring box.

Install / Uninstall Accessories

6. Place baffle filters underneath the hood. (Figure 7)

Final Assembly

7. Turn power ON in control panel. Check all lights and fan operation.
8. Leave this Installation Instructions and Operation Manual for the homeowner.

Figure 5

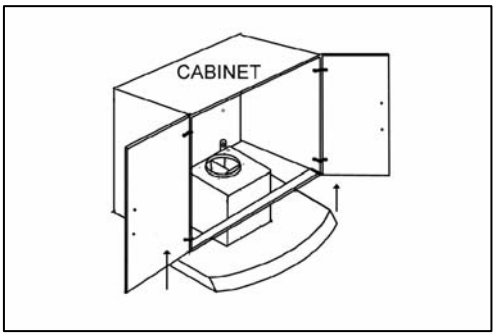

Figure 6

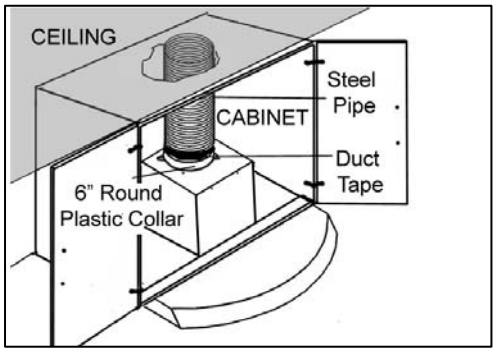

Figure 7

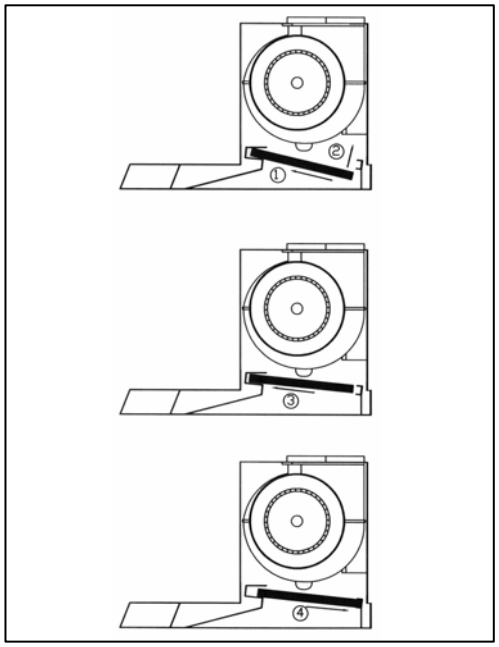

WALL MOUNT INSTALLATION

For Model No.: RA3830SQB-WM-1 / RA3836SQB-WM-1 / RA2830SQB-WM-1 / RA2836SQB-WM-1

Preparation before Installation

NOTE: TO AVOID DAMAGE TO YOUR HOOD, PREVENT DEBRIS FROM ENTERING THE VENT OPENING.

- Decide the location of the venting pipe from the hood to the outside. Refer to Figure 8.
- A straight, short venting run will allow the hood to perform more efficiently.
- Try to avoid as many transitions, elbows, and long run as possible. This may reduce the performance of the hood.
- Temporarily wire the hood to test for proper operation before installing. If the hood does not operate, check the circuit breaker or house fuse. If the hood is still not working, disconnect power supply and check the continuity of all wire connections.
- Peel protective film off the hood (if any).
- Use duct tape to seal the joints between pipe sections.
- If necessary, prepare back wall frame with cross framing lumber for secure installation. Using references on Table 2 and measurements on page 17-19, decide the level of the lumber. Refer to Figure 9.

Hood Installation

⚠**CAUTION: USE HAND TOOLS ONLY. DO NOT OVER TIGHTEN SCREWS. IT MAY CAUSE DAMAGE TO THE HOOD.**

⚠**CAUTION: If moving the cooking range is necessary to install the hood, turn off the power in an electric range at the main electrical box. SHUT OFF THE GAS BEFORE MOVING A GAS RANGE. And use a protective covering to protect cooktop and/or countertop from damage.**

1. Using references on Table 2 and measurements on page 17-19, mark the leveling point of the hood. Position mounting screws (not provided) on the wall, leaving 1/8" away from the wall as shown in Figure 10.
2. Loosen hood-mounting brackets at the back of the hood, adjust brackets and tighten screws as shown in Figure 11.
3. Align Hood-Mounting Bracket to the two screws on the wall and hook hood into place. Tighten screws to secure hood to the wall.

⚠**CAUTION: MAKE SURE THE HOOD IS SECURE BEFORE RELEASING.**

Figure 8

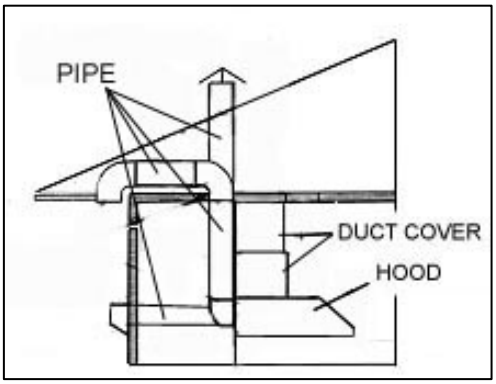

Figure 9

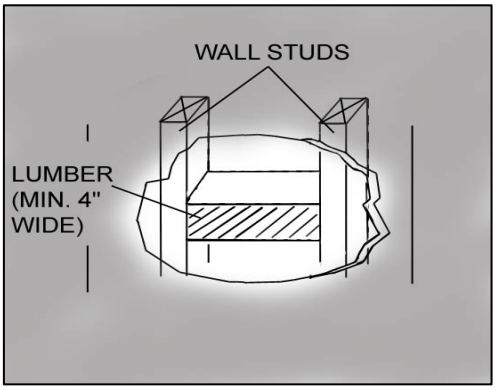

Figure 10

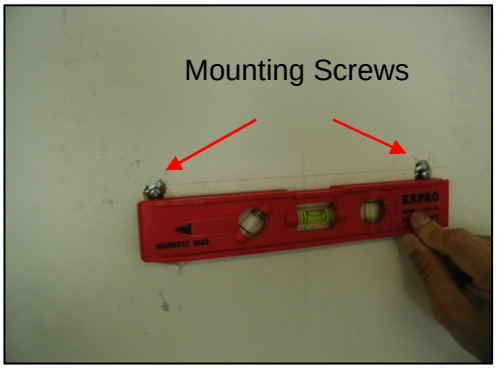

Figure 11

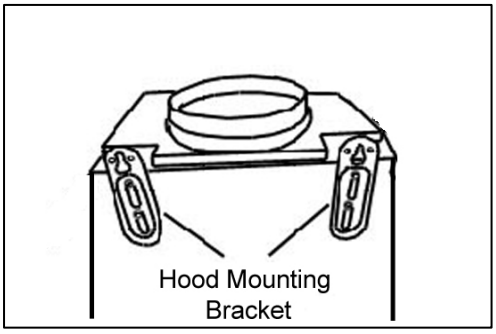

Wiring to Power Supply

⚠ **THIS RANGE HOOD MUST BE PROPERLY GROUNDED. MAKE SURE THIS IS DONE BY QUALIFIED ELECTRICIAN IN ACCORDANCE WITH ALL APPLICABLE NATIONAL AND LOCAL ELECTRICAL CODES. BEFORE CONNECTING WIRES, SWITCH POWER OFF AT SERVICE PANEL AND LOCK SERVICE PANEL TO PREVENT POWER FROM BEING SWITCHED ON ACCIDENTALLY.**

- If hood is operating normally, connect three wires (black, white and green) to house wires and cap with wire connectors.
- Store wires in the wiring box.

Ductwork Installation

4. Use steel pipe to connect the exhaust on the hood to the ductwork. Use duct tape to make all joints secure and air tight.

Duct Cover Installation

5. Mark the position of the Duct Cover-Mounting Bracket {F}. Use reference **E** from Table 2 and measurements on page 17-19. Attach and secure Duct Cover-Mounting Bracket {F} with two screws (not provided). Refer to Figure 12. NOTE: Inner duct cover will cover the Duct Cover-Mounting Bracket.
6. Remove the Baffle Filters. Position the entire duct cover up onto the hood and secure with six (3/16" x 3/8") screws {H} from inside the hood towards the outer duct cover.
7. Secure the inner duct cover with two (3/16" x 3/8") screws {H} to the Duct Cover-Mounting Bracket {F}. Shown in Figure 13.

Install / Uninstall Accessories

8. Place baffle filters underneath the hood. (Figure 14)

Final Assembly

9. Turn power ON in control panel. Check all lights and fan operation.
10. Leave this Installation Instructions and Operation Manual for the homeowner.

Figure 12

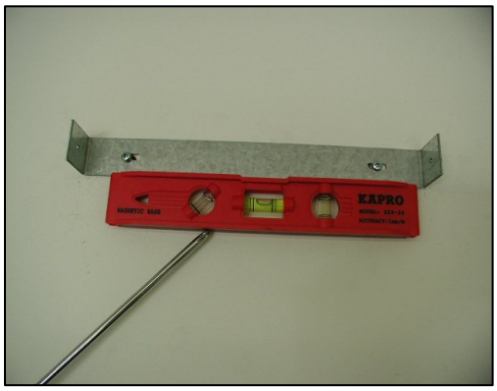

Figure 13

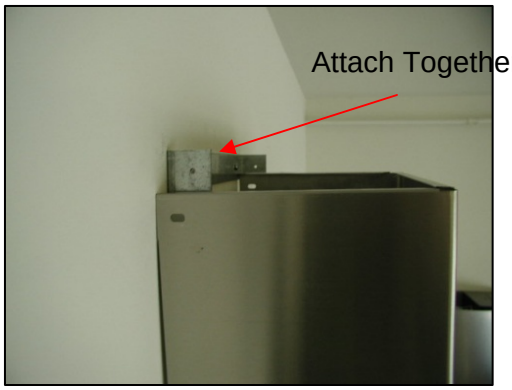

Figure 14

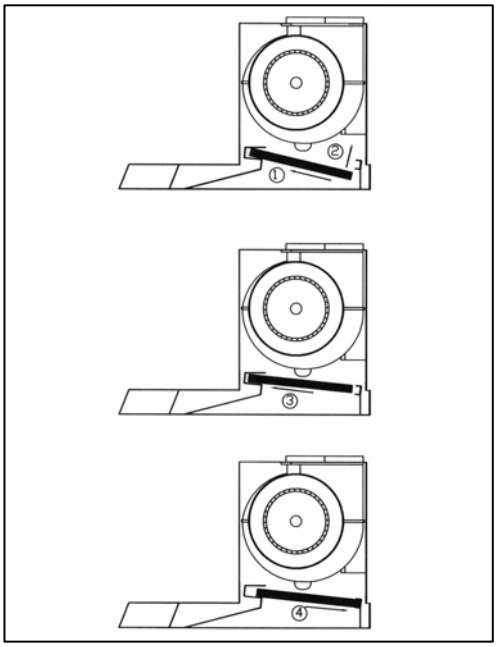

OPERATING INSTRUCTIONS

For RA-038-SQB-WM-1 Series
Model No.: RA3830SQB-WM-1 / RA3836SQB-WM-1

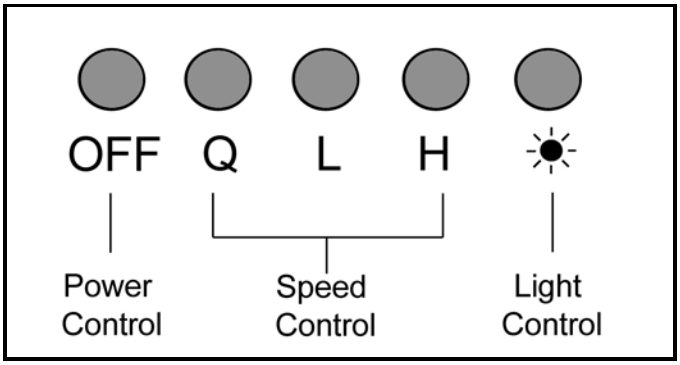

Note: For best results, turn fan on prior to any preparation or cooking and keep fans running while cooking. Adjust speed as needed.

To operate the fan function

- Press button to choose from speed.
  - Q = QuietMode™ speed
  - L = Low speed
  - H = High speed
- Press "OFF" to turn fan off.

To operate the light function

- Press the Light Control to turn lights on and off.

For RA-028-SQB-1 or RA-028-SQB-WM-1 Series
Model No.: RA2830SQB-1 / RA2836SQB-1
RA2830SQB-WM-1 / RA2836SQB-WM-1

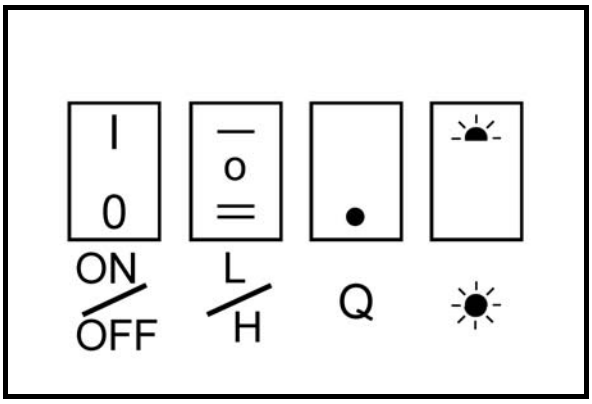

Note: For best results, turn fan on prior to any preparation or cooking and keep fans running while cooking. Adjust speed as needed.

To operate the fan function

- Press On/Off Control to turn on the power.
- Once the On/Off Control is turned on, the prior fan selection will turn on. Press the Speed Controls (Low, High or QuietMode™) to select the desired speed.
- QuietMode™ supersedes all other fan control. Turn off QuietMode™ to use Low or High speed.
- Press On/Off Control to turn fan off.

To operate the light function

- Press the Light Control to turn lights on and off.

Note: The Power Control switch is the main power controller.

MAINTENANCE

For optimal performance, clean the range hood surface and baffles regularly.

To Clean Hood Surface

CAUTION: NEVER USE ABRASIVE CLEANERS, PADS, OR CLOTHS.

*** Regular care will help preserve its fine appearance.

1. Use only mild soap or detergent solutions. Dry surfaces using soft cloth.
2. If hood looks splotchy (stainless steel hood), use a stainless steel cleaner to clean the surface of the hood. Avoid getting cleaning solution onto or into the control panel. Follow directions of the stainless steel cleaner. **Caution: Do not leave on too long as this may cause damage to hood finish**. Use soft towel to wipe off the cleaning solution, gently rub off any stubborn spots. Use dry soft towel to dry the hood.
3. DO NOT allow deposits to accumulate or remain on the hood.
4. DO NOT use ordinary steel wool or steel brushes. Small bits of steel may adhere to the surface and cause rusting.
5. DO NOT allow salt solutions, disinfectants, bleaches, or cleaning compounds to remain in contact with stainless steel for extended periods. Many of these compounds contain chemicals, which may be harmful. Rinse with water after exposure and wipe dry with a clean lint free cloth.

For Baffle Filter models only: to Clean Baffle Filter/Oil Tunnel

CAUTION: DRAIN OIL FROM BAFFLE FILTERS, SPACERS & OIL TUNNEL REGULARLY TO PREVENT OVERFLOW.

1. Remove all the baffle filters, spacers and oil tunnel.
2. Using a sponge, wash with warm soapy water. Dry completely before returning into place.
   CAUTION: SHARP EDGES
   (Note: Baffle Filters are top rack dishwasher safe.)

SPECIFICATIONS

MODEL / SIZE	For Under Cabinet Application: RA2830SQB-1 (30”) ; RA2836SQB-1 (36”) For Wall Mount Application: RA3830SQB-WM-1 (30”) ; RA3836SQB-WM-1 (36”) RA2830SQB-WM-1 (30”) ; RA2836SQB-WM-1 (36”)
COLOR	18-Gauge Commercial Grade Stainless Steel
CONSUMPTION / AMPERE	180W / 1.5A (30”) 300W / 2.5A (36”)
NUMBER OF BLOWER	1
DESIGN	Seamless / Satin Finish
BLOWER TYPE	Double Horizontal Squirrel Cage
EXHAUST	Top – 6" Round
CONTROLS	For RA-038-SQB-WM-1 3-Speed Mechanical Push Control For RA-028-SQB-1 and RA-028-SQB-WM-1 3-Speed Rocker Switch
LIGHTS	3-Watt LED light x 2
HOOD DIMENSION (W x D x H)	RA3830SQB-WM-1 (29-3/4” x 20-1/2” x 12-5/8”) RA3836SQB-WM-1 (35-3/4” x 20-1/2” x 12-5/8”) RA2830SQB-1 and RA2830SQB-WM-1 (29-3/4” x 19-5/8” x 11-5/8”) RA2836SQB-1 and RA2836SQB-WM-1 (35-3/4” x 19-5/8” x 11-5/8”)
OPTIONAL ACCESSORIES (W x D x H)	1) 30" Stainless Steel Back Panel SSP30 (30" x 1/10" x 32") 2) 36" Stainless Steel Back Panel SSP36 (36" x 1/10" x 32")

WEIGHT (lbs)	Net	Gross
RA2830SQB-1 (30”)		
RA2836SQB-1 (36”)		
RA3830SQB-WM-1 (30”)		
RA3836SQB-WM-1 (36”)		
RA2830SQB-WM-1 (30”)		
RA2836SQB-WM-1 (36”)		

For 30” Hood
***RA3830SQB-WM-1**
***RA2830SQB-1 / RA2830SQB-WM-1**

SPEED	QuietMode™	Low	High
Air Capacity (cfm)	280	450	680
Sone* (dB)	1.0	2.2	5.0

For 36” Hood
***RA3836SQB-WM-1**
***RA2836SQB-1 / RA2836SQB-WM-1**

SPEED	QuietMode™	Low	High
Air Capacity (cfm)	300	440	750
Sone* (dB)	1.0	2.0	5.6

*One sone is equivalent to the sound of a refrigerator at 40 decibels.
**Specifications subject to change without notice.

MEASUREMENTS & DIAGRAMS

***All inch measurements are converted from millimeters. Inch measurements are estimated.
***All measurements in ( ) are millimeters.

MODEL NO.: RA3830SQB-WM-1 (30”) / RA3836SQB-WM-1 (36”)

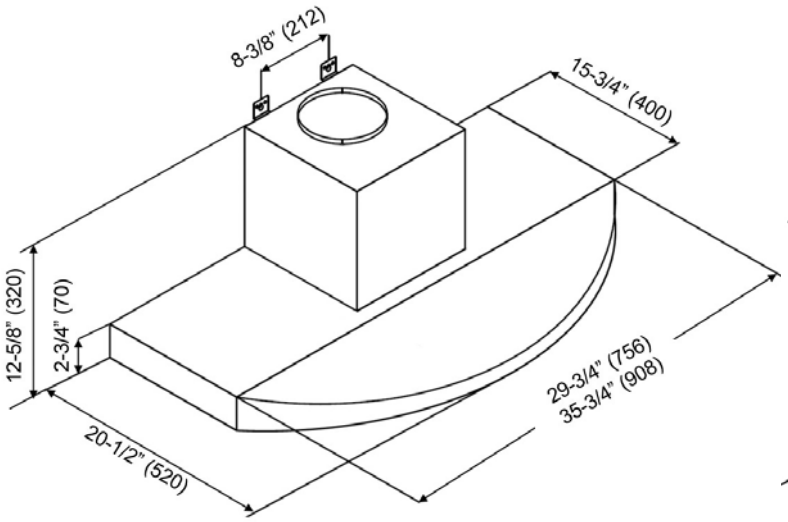

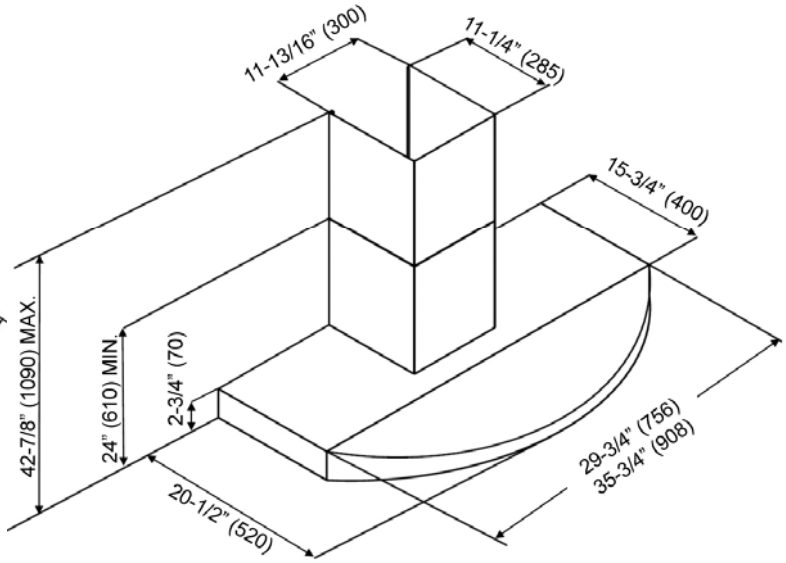

***All inch measurements are converted from millimeters. Inch measurements are estimated.
***All measurements in ( ) are millimeters.

-**FOR UNDER THE CABINET**-

MODEL NO.: RA2830SQB-1 (30”) / RA2836SQB-1 (36”)

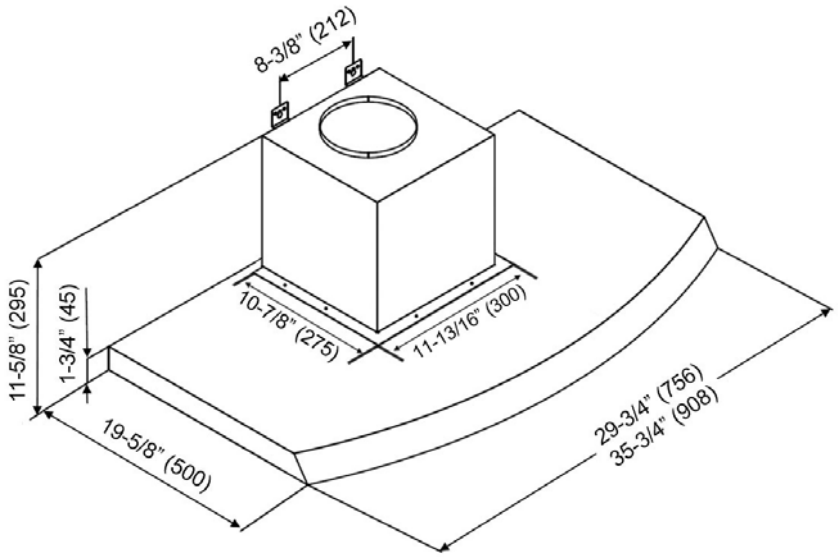

- **FOR WALL MOUNT** -

MODEL NO.: RA2830SQB-WM-1 (30”) / RA2836SQB-WM-1 (36”)

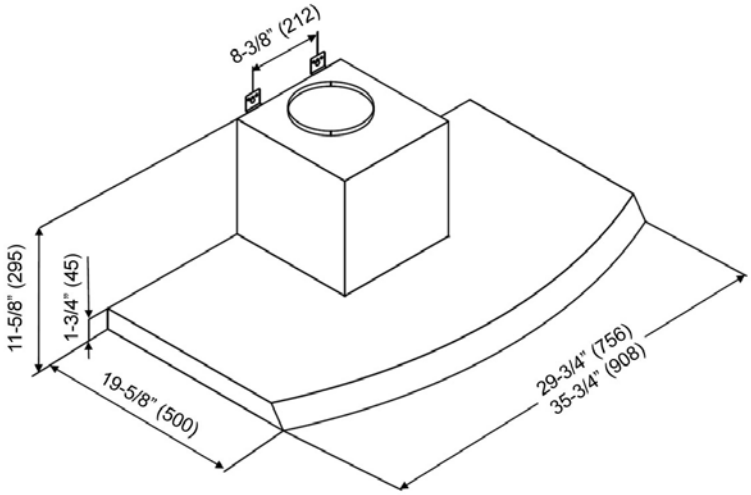

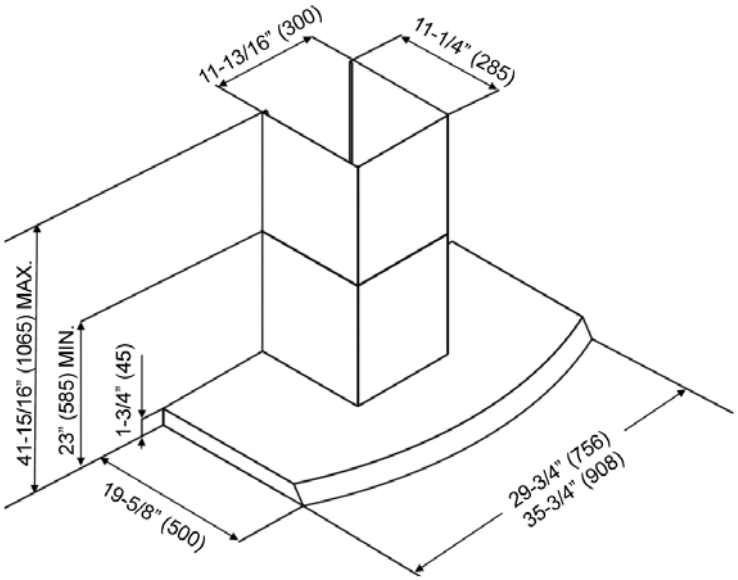

***Hood-Mounting Bracket

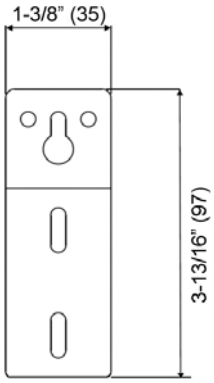

***Duct Cover-Mounting Bracke

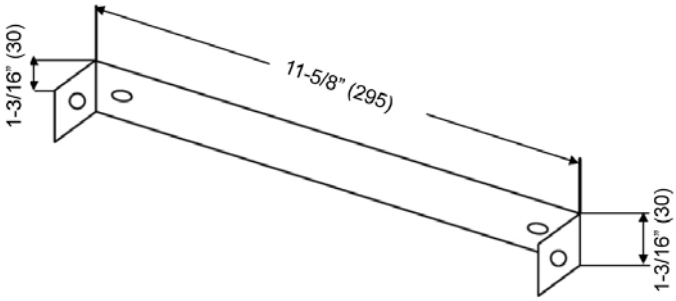

PARTS LIST

MODEL NO.: **RA3830SQB-WM-1 (30”)**
RA3836SQB-WM-1 (36”)

NO.	DESCRIPTION	MODEL /SIZE	PART NO.
1	Duct Cover -Mounting Bracket	RA028DC-1	L1-0203-1630
2	Duct Cover (Inner and Outer)		B102-02830
3	6″ Round Plastic Collar		L1-0505-0002
4	Hood Mounting Bracket x 2		L1-0201-03900
5	Capacitor	RA3830SQB-WM-1	L1-0401-0120-04
		RA3836SQB-WM-1	L1-0401-0120-24
6	LED Light Driver		L1-04012-D001
7	Electricial Box		L1-0524-0002
8	LED Light (3W)		L1-0403-0301
9	Control Unit		L1-0405-0301
10	Blower System	RA3830SQB-WM-1	L1-0302-0120-804S
		RA3836SQB-WM-1	L1-0302-0120-802S
11	Baffle Filters		L1-0214-0122

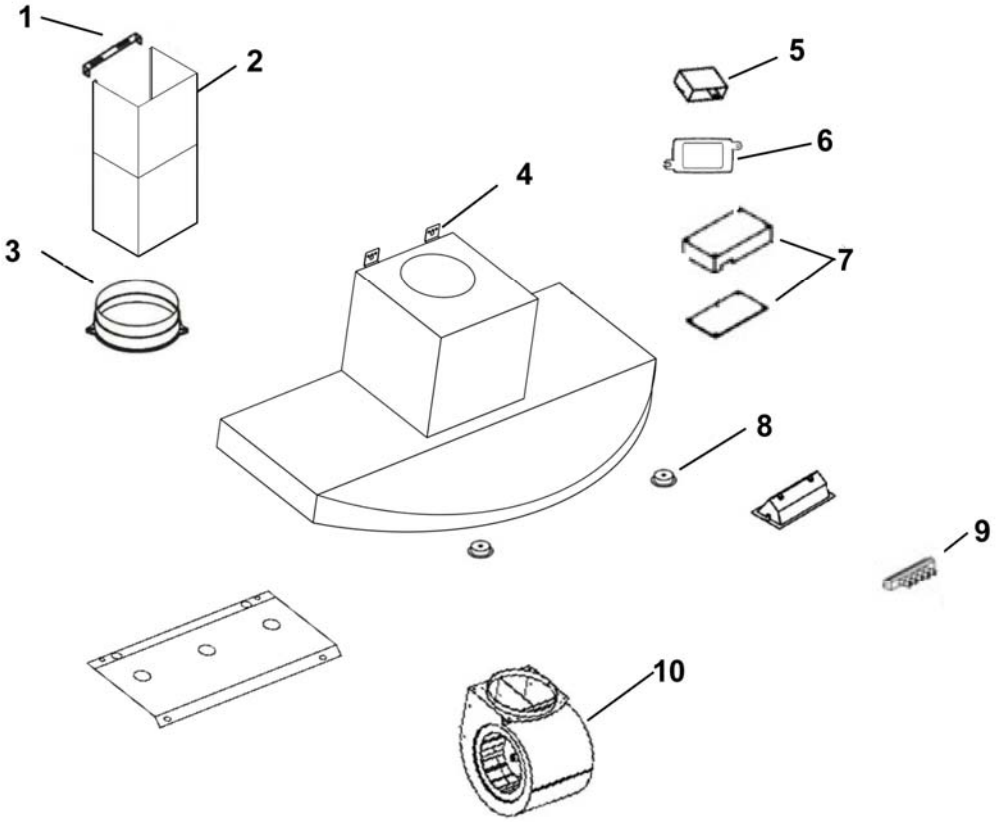

RA3830SQB-WM-1	RA3836SQB-WM-1
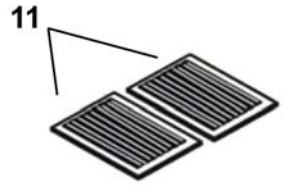	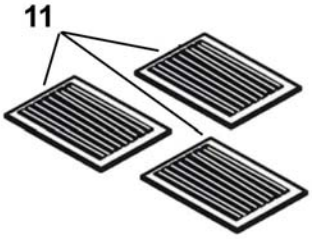

MODEL NO.: **RA2830SQB-1 (30”)**
RA2836SQB-1 (36”)

NO.	DESCRIPTION	MODEL /SIZE	PART NO.
1	6″ Round Plastic Collar		L1-0505-0002
2	Hood Mounting Bracket x 2		L1-0201-03900
3	Capacitor	RA2830SQB-1	L1-0401-0120-04
		RA2836SQB-1	L1-0401-0120-24
4	LED Light Driver		L1-04012-D001
5	Electricial Box		L1-0524-0002
6	LED Light (3W)		L1-0403-0301
7	On/Off Switch		L1-0405-0101
8	Speed Switch		L1-0405-0103
9	Speed Switch (QuietMode™)		L1-0405-0104
10	Light Switch		L1-0405-0102
11	Blower System	RA2830SQB-1	L1-0302-0120-804S
		RA2836SQB-1	L1-0302-0120-802S
12	Baffle Filters		L1-0214-0122

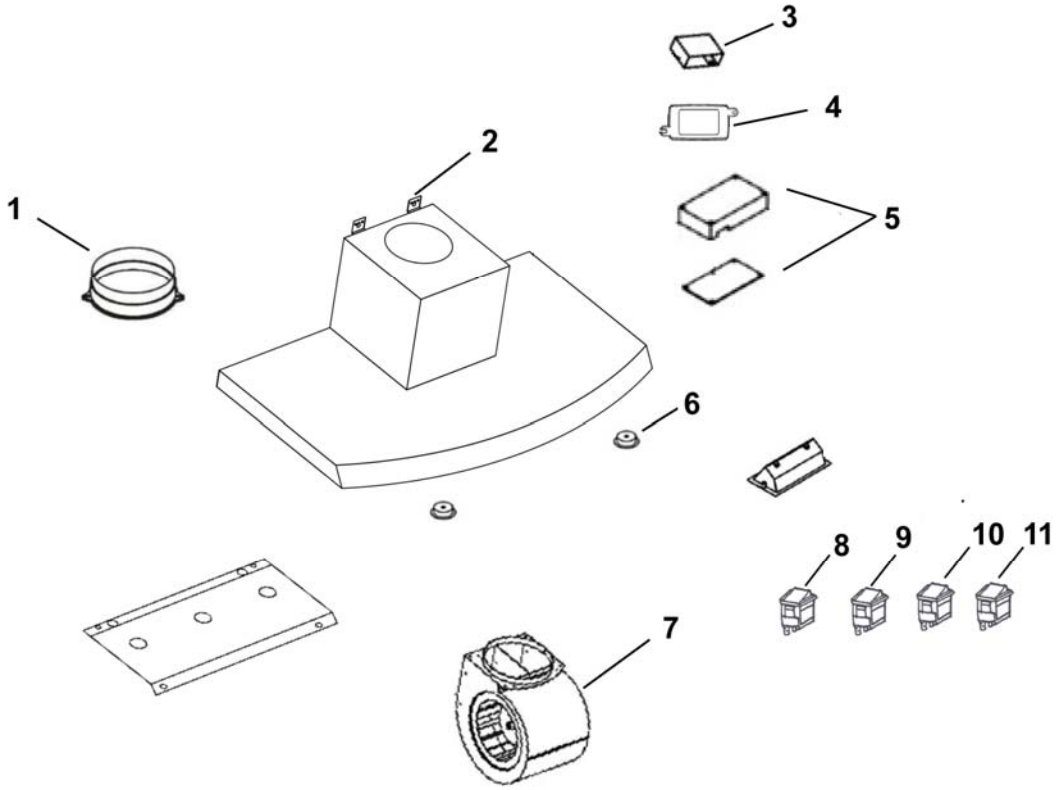

RA2830SQB-1	RA2836SQB-1
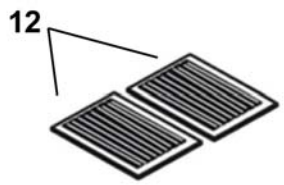	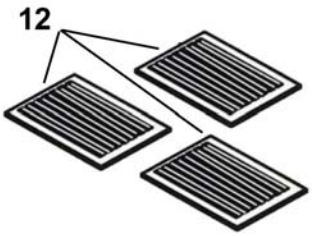

MODEL NO.: **RA2830SQB-WM-1 (30”)**
RA2836SQB-WM-1 (36”)

NO.	DESCRIPTION	MODEL /SIZE	PART NO.
1	Duct Cover -Mounting Bracket	RA028DC-1	L1-0203-1630
2	Duct Cover (Inner and Outer)		B102-02830
3	6″ Round Plastic Collar		L1-0505-0002
4	Hood Mounting Bracket x 2		L1-0201-03900
5	Capacitor	RA2830SQB-WM-1	L1-0401-0120-04
		RA2836SQB-WM-1	L1-0401-0120-24
6	LED Light Driver		L1-04012-D001
7	Electricial Box		L1-0524-0002
8	LED Light (3W)		L1-0403-0301
9	On/Off Switch		L1-0405-0101
10	Speed Switch		L1-0405-0103
11	Speed Switch (QuietMode™)		L1-0405-0104
12	Light Switch		L1-0405-0102
13	Blower System	RA2830SQB-WM-1	L1-0302-0120-804S
		RA2836SQB-WM-1	L1-0302-0120-802S
14	Baffle Filters		L1-0214-0122

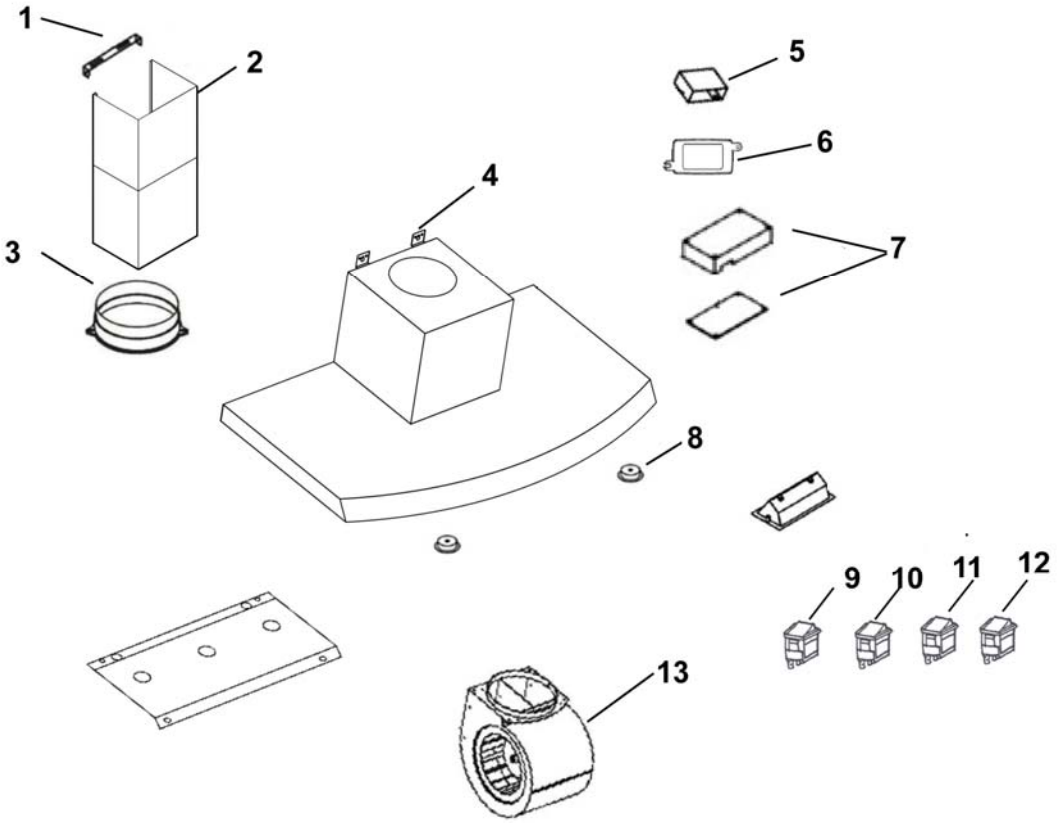

RA2830SQB-WM-1	RA2836SQB-WM-1
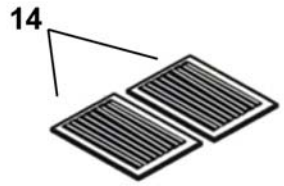	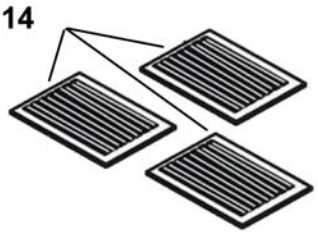

CIRCUIT DIAGRAM

MODEL NO.: **RA3830SQB-WM-1 (30”) / RA3836SQB-WM-1 (36”)**

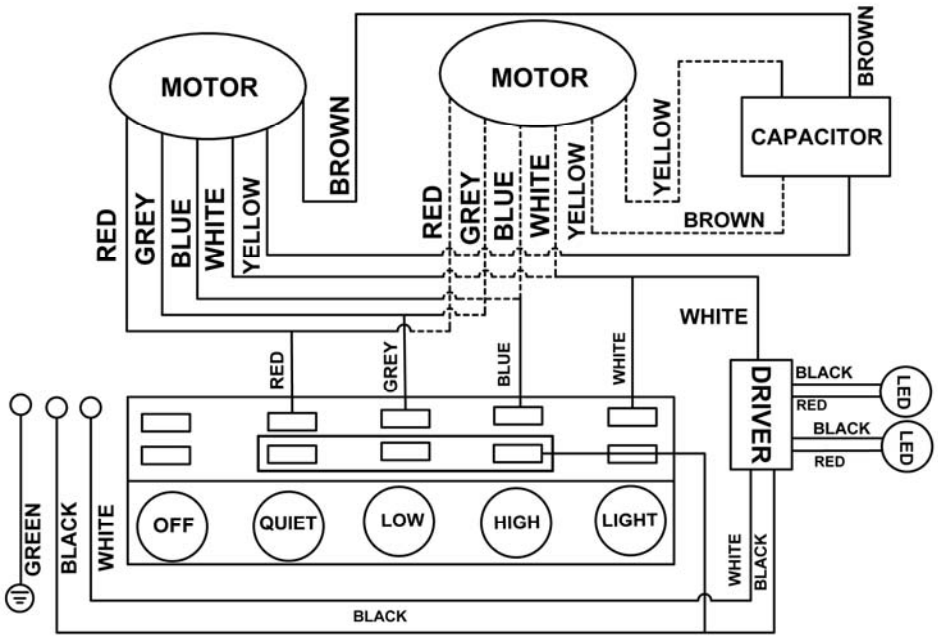

MODEL NO.: **RA2830SQB-1 (30”) / RA2836SQB-1 (36”)**
RA2830SQB-WM-1 (30”) / RA2836SQB-WM-1 (36”)

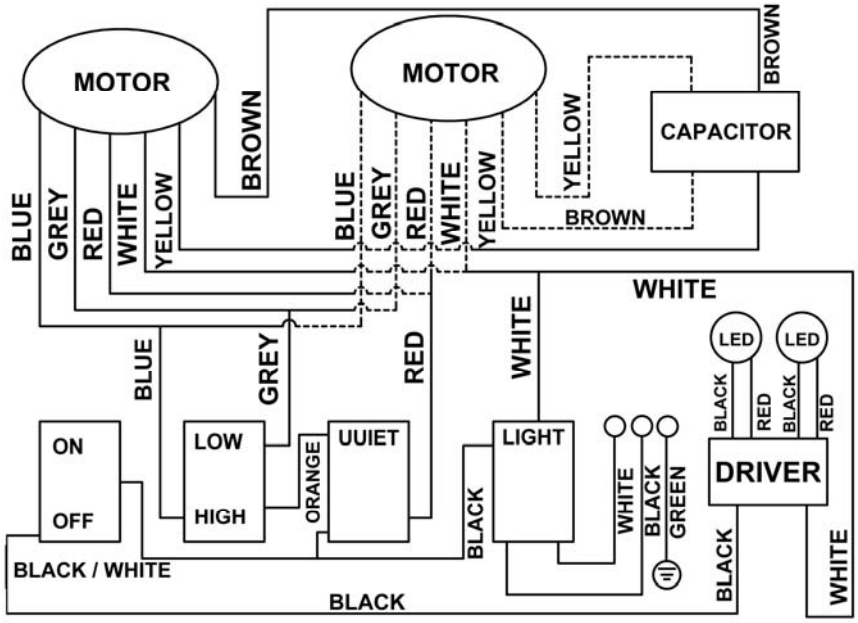

TROUBLE SHOOTING

Issue	Possible Cause	Solution
After Installation, both motors and lights are not working.	The power is not on.	Make sure the circuit breaker and the unit's power is ON. Use a voltage meter to check the power supply.
	The wire connection is not secure.	Check and tighten wire connection.
	The control panel is defective.	Replace the control panel.
Lights are working, but motor(s) is not.	The motor(s) is defective.	Replace the motor.
	The capacitor(s) is defective.	Replace capacitor(s).
	The control panel is defective.	Replace the control panel.
The range hood is vibrating.	The blower system is not secure.	Tighten the turbine impeller/squirrel cage and air chamber.
	The turbine impeller/squirrel cage is not balanced.	Replace the turbine impeller/squirrel cage.
	Hood is not secured in place.	Check the installation of hood, tighten the mounting bracket.
The motor is working, but the lights are not working.	LED light fixture(s) is defective.	Replace LED light fixture(s)
	The light wiring(s) is loose.	Check wire continuity from processor board to light transformer to LED light fixture(s).
	The control panel or LED light driver is defective.	Replace the control panel or LED light driver.
The range hood is not venting out correctly.	The range hood is installed outside of the manufacture recommended clearance.	Adjust the clearance between the range hoods and cook top to 26" to 30". For Island range hood, the clearance between the range hoods and cook top is 30" to 36".
	There is no make-up air inside the house.	Open the window to enhance the performance of the range hood by creating a sufficient make-up air.
	Obstacle blocking the pipe work.	Remove all obstacles from the duct work.
	The pipe size is smaller than the suggested pipe size.	Change the ducting according to the manufacture suggestion.
Cold air is coming into the home.	The pipe connection is not properly sealed.	Check the pipe installation.
	The damper is not properly installed or is missing from the installation.	Check the damper installation.
	The damper is not installed.	Installing the damper will help eliminate air backflow.

WARRANTY CERTIFICATE

KOBE Range Hoods (referred to herein as “we”or “us”) warrants to the original purchaser (referred to herein as “you” or “your”) all products manufactured or supplied by us to be free from defect in workmanship and materials as follows:

TWO-YEAR LIMITED WARRANTY FOR PARTS AND LABOR ON KOBE PREMIUM SERIES:
For two years from the date of your original invoice from a KOBE authorized dealer, we will, at our sole discretion, choose to repair or replace the product free of charge that failed due to manufacturing defects.

It is your sole responsibility to ensure the product is readily accessible for the service technician to perform repairs. **The service technician will not, under any circumstance, remove, alter or modify any fixture built around and/or connected to the product to gain access to perform repairs.**

During the two-year Limited Warranty period, additional charges may apply which include but are not limited to:

- Service technician travel charges if the requested service location is 30-miles out of KOBE’s authorized service area
- Parts shipping expenses
- Un-installation of defective product and Installation of replacement product

ONE-YEAR LIMITED WARRANTY FOR PARTS ON KOBE BRILLIA SERIES:
For one year from the date of your original invoice from a KOBE authorized dealer, we will provide, free of charge, parts to replace those that failed due to manufacturing defects. It is our sole discretion to choose to repair or replace defective parts. It is your sole responsibility for all labor costs associated with this warranty.

Warranty Exclusions:
This warranty does not cover, including but not limited to the following:

a. Improper installation.
b. Any repair, alteration, modification not authorized by KOBE.
c. Duct alteration, modification and connection.
d. Incorrect electric current, voltage or wiring.
e. Normal maintenance and service required for the product.
f. Consumable parts such as light bulbs and carbon filters.
g. Improper usage of the product that it is not intended for, such as commercial use, outdoor use and multi-family use.
h. Normal wear and tear.
i. Chips, scratches or dents by abuse or misuse of the product.
j. Damages caused by accident, fire, flood and other Acts of God.
k. Expenses incurred for service located outside of the designated service area.
l. Purchases from unauthorized dealers.
m. Removal fees of defective product and Installation fees associated with replacement product.

If we determine that the warranty exclusions listed above apply or if you fail to provide all necessary documentation for warranty service, you will be responsible for all expenses associated with the requested service, including parts, labor, shipping, travelling and any other expense related to the service request.

To qualify for warranty service, you must:

1. Have the **ORIGINAL** proof of purchase
2. Be the **ORIGINAL** purchaser of the product
3. Have the model number
4. Have the serial number
5. Have a description of the nature of any defect in the product or part

TO REQUEST WARRANTY SERVICE, PLEASE CONTACT THE KOBE RANGE HOODS SERVICE CENTER:

KOBE SERVICE CENTER
Tel: 1-855-800-KOBE (5623)
E-mail: kobe@adcoservice.com

PRODUCT REGISTRATION

Fill in the blanks and keep this paper with the **original invoice** in a safe place for future service purpose.

1. Date of purchase : _____
2. Model No. : _____
3. Serial No. : _____

For warranty service or spare parts purchase contact:
KOBE Service Center
Toll Free: 1-855-800-KOBE (5623)
Email: kobe@adcoservice.com

To report a problem, please contact:
Toll Free: 1-877-BUY-KOBE (289-5623)
Email: customer.service@koberangehoods.com

For product information contact:
Toll free: 1-877-BUY-KOBE (289-5623)
Email: info@koberangehoods.com

Your notes:

KOBE Range Hoods
11775 Clark Street
Arcadia, CA 91006 USA

http://www.KOBERangeHoods.com

This KOBE hood is made for use in the USA and CANADA only. We do not recommend using this hood overseas as the power supply may not be compatible and may violate the electrical code of that country. **Using a KOBE hood overseas is at your own risk and will void your warranty.**

Cette hotte KOBE est fabriquée pour usage aux États-Unis et au Canada seulement. Il n'est pas recommandé d'utiliser cette hotte à l'étranger puisque l'alimentation électrique pourrait ne pas être compatible et enfreindre le code de l'électricité de ce pays. **L'usage de la hotte KOBE à l'étranger est à votre propre risque et la garantie sera annulée.**

Esta campana de extracción KOBE ha sido fabricada para ser utilizada únicamente en EE.UU. y CANADÁ. No recomendamos la utilización de esta campana en el extranjero debido a que la fuente de energía podría no ser compatible y podría violar el código eléctrico de dicho país. **Utilizar una campana KOBE en el extranjero será a su propio riesgo y anulará la garantía.**

VER.130613

Information subject to change without notice.